HSR Carburetor

Easy Kits

Installation Instructions

For

Evo Big Twin Kit: # 42-7

Twin Cam Kit: # 42-18

Revised 01/23/02

Easy Kit Installation Instructions

The HSR series carburetors are precise yet durable instruments; however, like any other piece of fine equipment, they require correct installation and reasonable care to assure optimum performance and long life. Extra time spent during installation will pay off in both short and long term performance and reliability.

This Mikuni HSR carburetor kit is designed to be a bolt-on application, and as such, is set-up and jetted properly for most applications. However, since many Harley-Davidson motors are often highly modified, alternate tuning settings may be required.The Mikuni HSR Tuning Manual helps make jetting alterations and adjustments an easy matter.

NOTE: *Carburetor Kits not designated as C.A.R.B. exempt, are not legal for motor vehicles operated on public highways in the state of California, or in any other states and countries where similar laws apply.*

Notes, Cautions and Warnings

Statements in this manual preceded by these words are very important:

NOTE:

Gives helpful information that can make a job easier.

CAUTION

Indicates a possibility of damage to the vehicle if instructions are not followed.

WARNING

Indicates a possibility of personal injury or vehicle damage if instructions are not followed.

Disassembly

1. Disconnect the negative (-) battery terminal.
2. Turn the fuel petcock to the “OFF” position.
3. Elevate the rear of the fuel tank for better access. It is not necessary to remove the tank to install this kit.
4. Remove the air cleaner assembly, including the back-plate.
5. Disconnect the choke cable from its bracket.
6. Disconnect the vacuum and fuel hose from the carburetor.
7. Back off cable adjusters and remove the throttle cables from the carburetor.
8. Remove the carburetor from the motorcycle.
9. Remove enrichener (choke) cable from the carburetor.

WARNING

Read these instructions carefully before you begin installation of your HSR kit. All procedures in this manual should be followed, paying particular attention to the following:

1. *Mikuni HSR series carburetors require the use of a push/pull throttle assembly to assure closing of the throttle valve.*
2. *The throttle cables should be routed freely (without sharp bends) between the throttle twist grip and the carburetor and must not be pinched.*
3. *Gasoline is extremely flammable and is explosive under certain conditions. Do not install your Mikuni near open flame.*
4. *Never look directly into the bore of the carburetor while the engine is running as injury may result from possible backfire.*

CAUTION

A moderate level of mechanical skill is required to install this carburetor kit. After reading these instructions, if you have any doubts, we recommend that you have a professional install it for you. If you install the kit yourself, we recommend that you also use the applicable shop manual for your motorcycle.

Installation

1. Choke Cable (Evo & Twin Cam)

A. Remove the Harley choke cable from the stock carb.

B. Remove the spring and plunger from the cable.

C. Remove the spring and plunger from the Mikuni carburetor.

D. Install the Mikuni spring and plunger onto the Harley choke cable. Change nothing else; be sure to use the Harley plastic nut, not the Mikuni nut (See Figure1).

E. Install the new assembly into the Mikuni carburetor. Be careful to only gently tighten the plastic nut.

Harley Nut

Mikuni Spring

Mikuni Plunger

Figure 1

2. Throttle Cables

WARNING

Control cables must not pull tight when handlebars are turned to the left and right fork stops. Also, be sure control cables and wires are clear of the fork stops at the steering head so that they will not be pinched when forks are turned against stops.

A. The HSR carburetor uses the stock throttle cables. However, new cable routing is required to prevent cable binding. To re-route the cables you must elevate the rear of the tank. Cut the stock cable tie from the frame, located above the front cylinder. Some models may use sheet metal clips; if so, remove the cables from the clip. Re-route the cables under the frame (Figure 2).

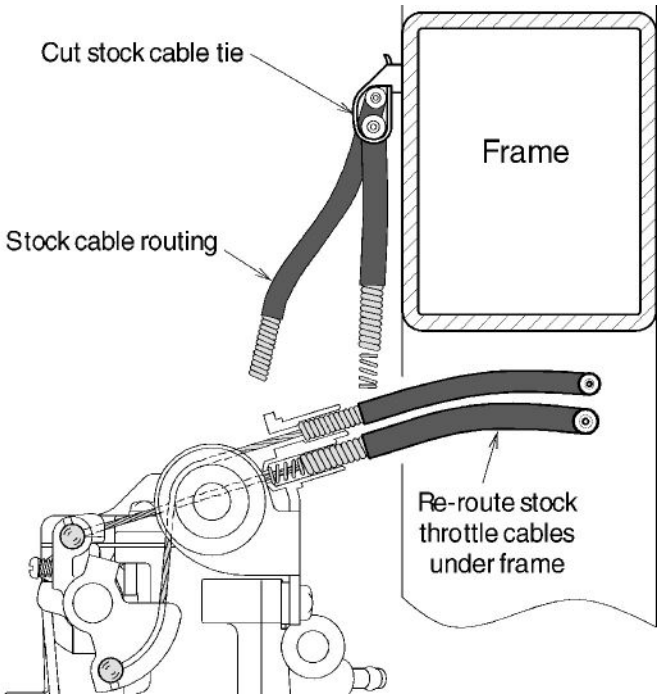

Figure 2

B. Connect the throttle cables to the carburetor bell crank by first installing the closing cable, then the opening cable (Figure 3).

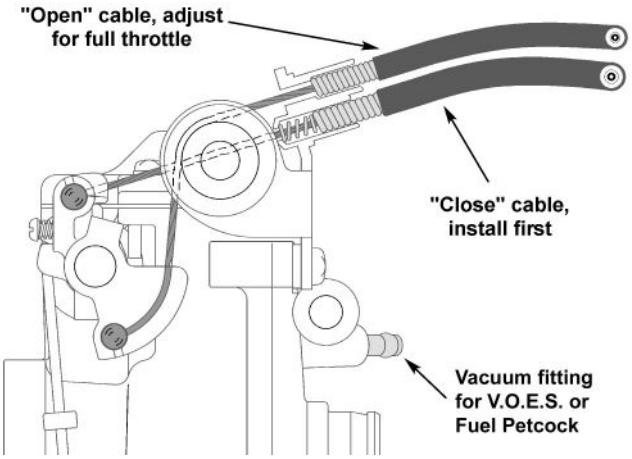

Figure 3

3. Carburetor Installation

A. Insert the carburetor into the stock Harley-Davidson manifold. The carburetor will fit very snugly. Use grease as a lubricant. Be sure that the choke routing doesn't become kinked.

B. Slip the fuel hose onto the carburetor's fuel nipple and secure with the enclosed hose clamp.

C. Some Twin Cam installations may require removal of a small amount of fin material from the cylinders to clear the float bowl.

NOTE:

1. *If you are not using the V.O.E.S. or vacuum petcock, be sure to cap the vacuum fitting on the carburetor.*
2. *Before installing the carburetor, check the condition of the carburetor seal; if damaged, it should be replaced to prevent air leaks. We recommend that you start with a new seal.*

4. Stock Backplate (1340 Evo Only)

A. Insert the enclosed large diameter O-ring into the Mikuni adapter. Attach the adapter to the stock back-plate with the provided screws. Do not use the stock screws; they are too long.

B. Use a small amount of thread lock on each of the screws (Figure 4).

C. Align the carburetor so that it is centered between the front and rear cylinders. Secure the backplate to the engine with the stock bolts.

NOTE:

1. *Before attaching the backplate, check that the carburetor is inserted fully into the intake manifold. If the carburetor is not fully seated, air leaks might result.*
2. *If you are using the Screamin' Eagle air cleaner kit, refer to the instructions from that kit.*

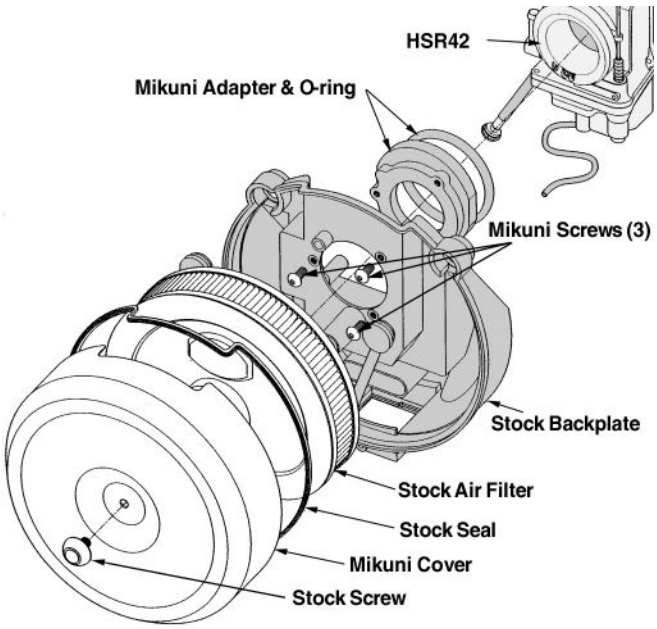

Figure 4

5. Backplate (Twin Cam 88)

A. Insert the enclosed large diameter O-ring into the Mikuni adapter. Assemble the stock backplate and adapter using the enclosed gasket and stock gasket . Use a small amount of thread lock on each of the stock screws.

B. Insert the enclosed small O-rings into the 1/8" spacers. The spacers mount between the backplate and heads. Secure the backplate to the engine using the spacers with the O-ring facing the engine (Figure 5).

NOTE:

Before attaching the backplate, check that the carburetor is inserted fully into the intake manifold. If the carburetor is not fully seated, air leaks might result.

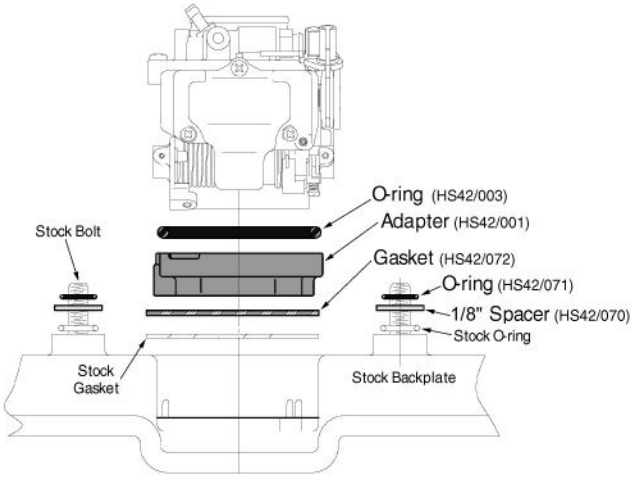

Figure 5

6. Screamin' Eagle Backplate (Twin Cam)

A. Insert the enclosed large O-ring into the Mikuni adapter. Assemble to the Screamin' Eagle backplate. Use thread lock on each of the stock bolts.

B. The remainder of the Mikuni/Screamin' Eagle installation follows the Harley instructions. We recommend that you follow those directions to complete the air cleaner installation (Figure 6).

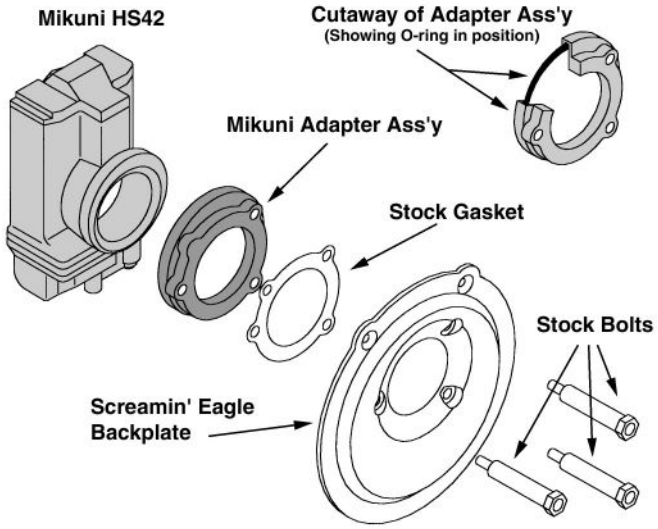

Figure 6

7. Cable Lube

Remove upper throttle housing and inject cable lube in each cable (Figure 7).

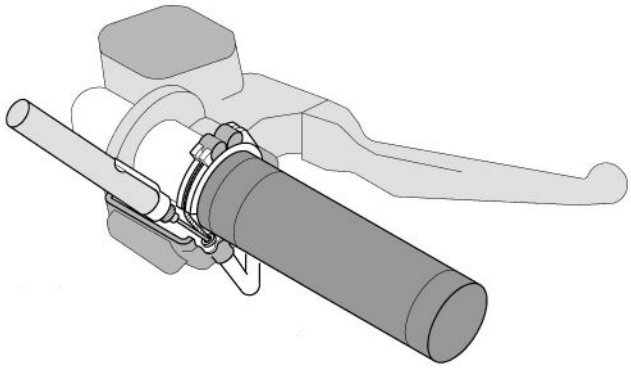

Figure 7

8. Throttle Cables — Adjustment

WARNING

It is important to adjust the cable as described below to ensure that the close cable operates correctly and can close the carburetor fully.

A. Rotate the throttle grip to the full open position and check to see that the throttle valve (slide) opens completely by looking into the carburetor bore. If the throttle valve doesn't open fully, unscrew the adjuster on the opening cable until it does. This adjustment should be made carefully to get the maximum performance from the carburetor. After the adjustment is made, tighten the adjuster jam nut.

B. After adjusting the opening cable, turn the handlebars to the right and adjust the throttle free-play with the closing cable to approximately 1/8" (Figure 8).

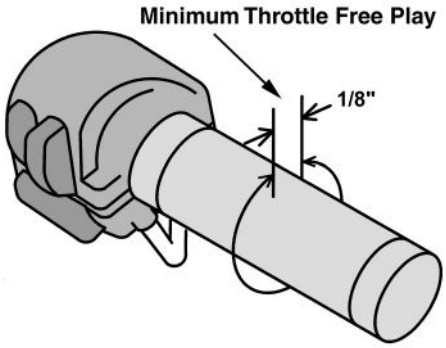

Figure 8

9. Air Cleaners (Evo & Twin Cam)

Evolution 1340 Air Cleaner Cover:

Remove the seal from the stock air cleaner cover and attach it to the Mikuni cover.

NOTE:

Do not use the stock Evo air cleaner cover because it will restrict the airflow and may cause a rich condition at full throttle.

Twin Cam 88 Air Cleaner Cover:

Install the stock air cleaner cover to the backplate; make sure the seal is in place.

NOTE:

To properly maintain the HSR's performance, we recommend that the air cleaner be inspected at 5,000-mile intervals. Clean or replace the filter as necessary.

10. Hose Routing

Route the carburetor overflow hose from the bottom of the float bowl behind the rear push rod tubes and in between the crankcase and transmission. Do not connect to any other hose.

CAUTION

1. *If you are not using the V.O.E.S., seal the Vacuum Fitting on the carburetor.*
2. *The Vent Fitting located above the Fuel Fitting must not be sealed! Sealing it results in erratic air/fuel mixture ratios, poor performance and possible engine damage.*

NOTE:

You will notice that in many instances you will have some remaining hoses. Since this is a performance application only, any remaining hoses and related hardware can be removed, as they are not required.

11. Choke Cable

A. When installing the choke cable be sure that there are no sharp bends in the cable. Mount the choke cable to the bracket. Do not over-tighten the nut to prevent breakage.

B. After mounting the choke cable, check the free-play. Loosen the knurled plastic friction nut behind the choke knob for this test (Figure 9).

NOTE:

If there is no free-play, the engine may run rich and cause poor performance or low fuel mileage.

Loosen the plastic friction nut only as much as necessary to free the choke shaft. If the nut is turned out too far, its center portion will interfere with your ability to detect free-play.

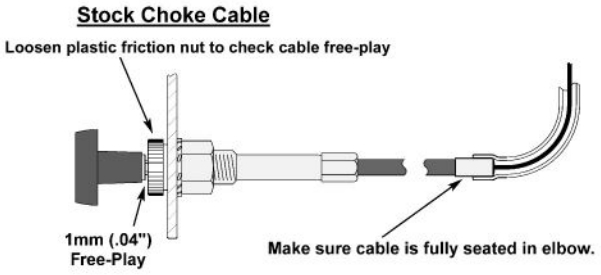

Figure 9

12. Starting

A. Re-connect the battery at this time and re-assemble the remainder of the motorcycle.

B. Turn the fuel petcock on and start the motorcycle as you normally would.

C. After the engine is warmed up adjust the idle to the recommended idle speed of 1,000 to 1,100 rpm.

NOTE:

'95 to present models are equipped with a vacuum petcock. It may be necessary to crank the engine over several times before fuel flows to the carburetor.

Parts List for 42-7 and 42-18

Part#	*Description*	*Qty*	*HSR Kit*
TM42-6	Carburetor	1	7, 18
HS42/001	Adapter	1	7, 18
HS42/002	Screw, Adapter	3	7
HS42/003	O-ring (Large)	1	7, 18
HS42/006	Cover, Cleaner	1	7
HS42/070	Spacer	2	18
HS42/071	O-ring	2	18
HS42/072	Gasket	1	18
Z70/073	Cable Lube	1	7, 18
N100.604-155	Main Jet	1	7, 18
N100.604-165	Main Jet	1	7, 18
Z70/045	Hose Clamp	1	7, 18
Z70/146	Cable Tie	3	7, 18

NOTES:

HSR PARTS LIST

#	PART NO.	DESCRIPTION
1.	C5=0410-B	Screw, Top Cover
2.	CW2=0414-B	Screw, Top Cover
3.	776-39005	Top Cover
4.	***TM42/04***	Gasket, Top Cover
5.	***BS32/126***	E-Ring, Jet Needle
6.	***826-03002***	Washer, Jet Needle
7.	J8-8DDY01-97	Jet Needle (42)
7a.	J8-8CFY02-97	Jet Needle (45/48)
8.	TM42/03	Lever, T.V. (42/45)
8a.	TM42/08-1A	Lever, T.V. (48)
9.	B40I/56	E-Ring, Link Lever
10.	B40I/10	Packing, Link Lever
11.	834-23041	Pin, Link Lever
12.	TM42/08-3.0	Throttle Valve (Slide)
13.	739-13002	Screw, Needle Retainer
14.	TM42/16	Clip, Needle Retainer
15.	TM42/13	Sealing Ring, T.V. (42/45)
15a.	TM48/02	Sealing Ring, T.V. (48)
16.	TM42/10	Seal, Throttle Valve
17.	925-98006	Pulley, Cable Bracket
18.	53974	E-Ring, Cable Bracket
19.	TM42/51	Bracket Ass'y, Cable
19a.	TM42/53	Bracket Ass'y, Sportster
20.	B3=0520-B	Bolt, Bracket
21.	VM28/204	Spacer, Bracket
22.	TM42/38	Plate, Lock Tab
23.	C2=0514-B	Screw
24.	640-12001	Starter Nut, Choke
25.	VM14/241	Spring, Starter Plunger
26.	N189.192	Starter Plunger
27.	~~TM42/06~~	~~Body, Bearing & Spigot (42/45)~~
27a.	~~TM48/02~~	~~Body, Bearing & Spigot (48)~~
28.	616-94029	Seal, Spigot Body
29.	925-19011	Ring (Steel)
30.	TM42/43	Lever, A/P
31.	N138.019	Pin, Throttle Lever
32.	TM42/48	Lever, Throttle
33.	M12F/46-BB	Spring, A/P
34.	MC-0316-B	Screw, A/P
35.	TM42/47	Spring, A/P
36.	~~TM42SS1/01-0~~	~~Mixing Body (42/45)~~
36a.	~~TM48SS1/01~~	~~Mixing Body (48)~~
37.	B36/95	Packing, Shaft (Plastic)
38.	TM42/36	Adjusting Screw, A/P
39.	B30/205	O-Ring, A/P Screw
40.	TM40/89	Bolt
40a.	TM42/17	Plate, Lock Tab for Shaft
41.	BN38/43	Pin, Return Lever
42.	TM42/46	Lever, Return
43.	B30/1069	Adjusting Screw, Throttle
44.	N3=04	Nut, Throttle Stop
45.	TM42/19	Spring, Throttle Return
46.	700-15012	Shaft, Throttle
47.	TM42/15	Plate, Fuel Joint Retainer
48.	C2=0410-B	Screw, Fuel Joint
49.	604-26014	Screw, Pilot Air
50.	N133.206	Spring, Pilot Air
51.	VM12/205	Washer, Pilot Air
52.	***N133.037***	O-Ring, Pilot Air
53.	TM40/27	Fuel Joint
54.	***KV/10***	O-Ring, Fuel Joint
55.	B30/398	Packing, Idle Adjuster
56.	VM22/138	Washer, Idle Adjuster
57.	730-09018	Spring, Idle Adjuster
58.	925-15001	Ring,Idle Adjuster
59.	TM42/32	Idle Adjuster (Long)
59a.	990-605-065	Idle Adjuster (Short)
60.	BS30/97-00	Air Jet (Blank)
61.	784-430000-Y-6	Needle Jet (723)
62.	TM42/11-70	Nozzle, Accel. Pump
63.	***N124.063***	O-Ring, A/P
64.	VM28/486-25	Pilot Jet
65.	TM42/12	Extender, Main Jet (42/45)
65a.	TM42/12-1A	Extender, Main Jet (48)
66.	N100.604-160	Main Jet
67.	***616-33003***	O-Ring N.V.
68.	***VM13/216***	Screw, N.V. Retainer
69.	***786-27001-4.2***	Needle Valve Ass'y (42/45)
69a.	***786-27002-1A***	Needle Valve Ass'y (48)
70.	859-32027	Float Ass'y
71.	BV26/22	Pin, Float
72.	C2=0410	Screw, Float Pin
73.	***616-94028***	Packing, Float Bowl
74.	TM42/05	Float, Chamber Body
75.	***N122.028***	Hose, Overflow
76.	***VM28/254***	O-Ring, Drain Plug
77.	TM32/41	Drain plug (42/45)
77a.	TM32/41-1D	Drain Plug (48)
78.	***C2=0412-B***	Screw, Flt Bowl, short
79.	TM36/44-1A	Rod, A/P
80.	***TM36/64***	Boot, A/P Rod
81.	TM36/60	Plunger, A/P
82.	VM14SC13/89	Spring, A/P
83.	N198.063	Rubber Cap, Purge Port

Alternate Parts

Jet Needles:

HSR42	HSR45/48	
J8-8DDY01-95	J8-8CFY02-95	Richer
J8-8DDY01-96	J8-8CFY02-96	Richer
J8-8DDY01-97	J8-8CFY02-97	Std
J8-8DDY01-98	J8-8CFY02-98	Leaner

Accelerator Pump Nozzles:

TM42/11-70	Std
TM42/11-60	Leaner
TM42/11-50	Leaner

Needle Valve Assemblies:

786-27002-1A-4.5	Std (HSR48)
786-27001-4.2	Std (HSR42/45)
786-27001-3.5	Smaller
786-27001-2.3	Pressure only

Rebuild Kit:

HSR42/45: **KHS-016**
HSR48: **KHS-031**

NOTE:
1. ~~Lined through~~ part numbers are not available.
2. **Parts in bold** are included in rebuild kits.

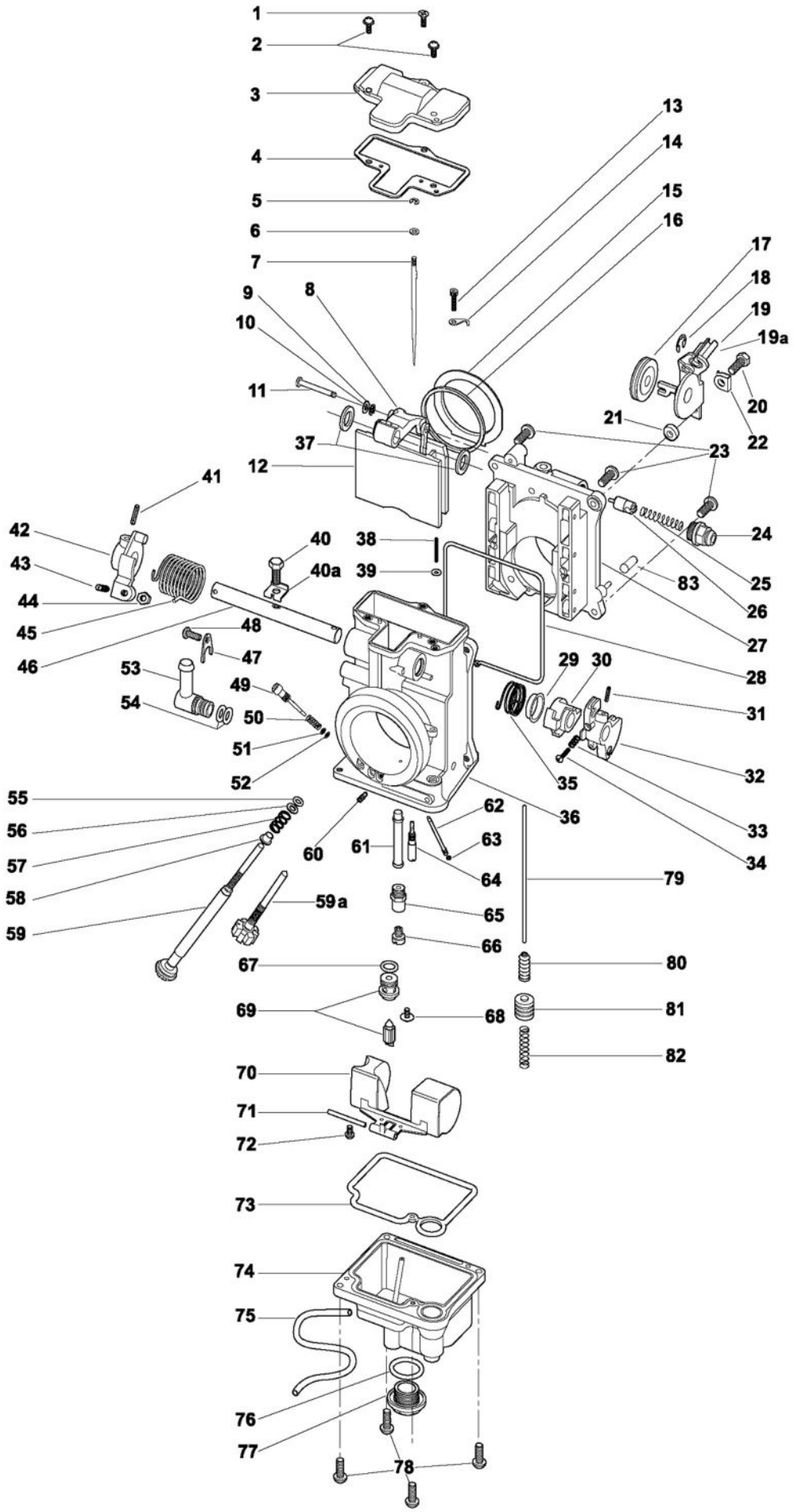
1
2
3
4
5
6
7
8
9
10
11
12
13
14
15
16
17
18
19
19a
20
21
22
23
24
25
26
27
28
29
30
31
32
33
34
35
36
37
38
39
40
40a
41
42
43
44
45
46
47
48
49
50
51
52
53
54
55
56
57
58
59
59a
60
61
62
63
64
65
66
67
68
69
70
71
72
73
74
75
76
77
78
79
80
81
82
83

Mikuni American Corporation

8910 Mikuni Avenue

Northridge, CA 91324-3496

www.mikuni.com

#	PART NO.	DESCRIPTION
1.	C5=0410-B	Screw, Top Cover
2.	CW2=0414-B	Screw, Top Cover
3.	776-39005	Top Cover (42/45)
3a.	111-776-001	Top Cover (HSR48)
4.	***TM42/04***	Gasket, Top Cover
5.	***BS32/126***	E-Ring, Jet Needle
6.	***82603002***	Washer, Jet Needle
7.	J8-8DDI01-97	Jet Needle (42)
7a.	J8-8CFY02-97	Jet Needle (45/48)
8.	TM42/03	Lever, T.V. (45/48)
8a.	TM42/08-1A	Lever, T.V. (HSR48)
9.	B401/56	E-Ring, Link Lever
10.	B40I/10	Packing, Link Lever
11.	834-23041	Pin, Link Lever
12.	TM42/08-3.0	Throttle Valve (Slide)
13.	739-13002	Screw, Needle Retainer
14.	TM42/16	Clip, Needle Retainer
15.	TM42/13	Sealing Ring, T.V. (42/45)
15a.	TM48/02	Sealing Ring, T.V. (48)
16.	TM42/10	Seal, Throttle Valve
17.	925-98006	Pulley, Cable Bracket
18.	53974	E-Ring, Cable Bracket
19.	TM42/51	Bracket Ass'y, Cable
19a.	TM42/53	Bracket Ass'y, Sportster
20.	B3=0520-B	Bolt, Bracket
21.	VM28/204	Spacer, Bracket
22.	TM42/38	Plate, Lock Tab
23.	C2-0514-B	Screw
24.	640-12001	Starter Nut, Choke
25.	VM14/241	Spring, Starter Plunger
26.	N189.192	Starter Plunger
27.	TM42/06	Body (HSR42/45)
27a.	TM48/02	Body (HSR48)
28.	616-94029	Seal, Spigot Body
29.	925-19011	Ring (Steel)
30.	TM42/43	Lever, A/P
31.	N138.019	Pin, Throttle Lever
32.	TM42/48	Lever, Throttle
33.	M12F/46-BB	Spring, A/P
34.	MC-0316-B	Screw, A/P
35.	TM42/47	Spring, A/P
36.	TM42SS1/01-0	Mixing Body (42/45)
36a.	TM48SS1/01	Mixing Body (48)
37.	B36/95	Packing, Shaft (Plastic)
38:	TM42/36	Adjusting Screw, A/P
39.	B30/205	ORing, A/P Screw
40.	TM40/89	Bolt
40a.	TM42/17	Plate, Lock Tab for Shaft
41.	BN38/43	Pin, Return Lever
42.	TM42/46	Lever, Return
43.	B30/1069	Adjusting Screw, Throttle
44.	N3=04	Nut, Throttle Stop
45.	TM42/19	Spring, Throttle Return
46.	700-15012	Shaft, Throttle
47.	TM42/15	Plate, Fuel Joint Retainer
48.	C2-0410-B	Screw, Fuel Joint
49.	604-26014	Screw, Pilot Air
50.	N133.206	Spring, Pilot Air
51.	VM12/205	Washer, Pilot Air
52.	***N133.037***	ORing, Pilot Air
53.	TM40/27	Fuel Joint
54.	***KV/10***	O-Ring, Fuel Joint
55.	B30/398	Packing, Idle Adjuster
56.	VM22/138	Washer, Idle Adjuster
57.	730-09018	Spring, Idle Adjuster
58.	925-15001	Ring, Idle Adjuster
59.	TM42/32	Idle Adjuster (Long)
59a.	990-605-065	Idle Adjuster (Short)
60.	BS30/97-00	Air Jet (Blank)
61.	784-430000-Y-6	Needle Jet (723)
62.	TM42/11-70	Nozzle, Accel, Pump
63.	***N124.063***	O-Ring, A/P
64.	VM28/486-25	Pilot Jet
65.	TM42/12	Extender, Main Jet (42/45)
65a.	TM42/12-1A	Extender, Main Jet (48)
66.	N100.604-160	Main Jet
67.	***616-33003***	O-Ring N.V.
68.	***VM13/216***	Screw, N.V. Retainer
69.	***786-27001-4.2***	Needle Valve Ass'y (42/45)
69a.	***786-27002-1A***	Needle Valve Ass'y (48)
70.	859-32027	Float Ass'y
71.	BV26/22	Pin, Float
72.	C2=0410	Screw, Float Pin
73.	***616-94028***	Packing, Float Bowl
74.	TM42/05	Float, Chamber Body
75.	***N122.028***	Hose, Overflow
76.	***VM28/254***	O-Ring, Drain Plug
77.	TM32/41	Drain plug (42/45)
77a.	TM32/41-1D	Drain plug (48)
78.	***C2=0412-B***	Screw, Flt Bowl, short
79.	TM36/44-1A	Rod, A/P
80.	***TM36/64***	Boot, A/P Rod
81.	TM36/60	Plunger, A/P
82.	VM14SC13/89	Spring, A/P
83.	N198.063	Rubber Cap, Purge Port

Alternate Parts

Jet Needles:

HSR42	HSR45/48	
J8-8DDY01-95	J8-8CFY02-95	Richer
J8-8DDY01-96	J8-8CFY02-96	Richer
J8-8DDY01-97	J8-8CFY02-97	Std
J8-8DDY01-98	J8-8CFY02-98	Leaner

Accelerator Pump Nozzles:

TM42/11-70	Std
TM42/11-60	Leaner
TM42/11-50	Leaner

Needle Valve Assemblies:

786-27002-1A-4.5	Std (HSR48)
786-27001-4.2	Std (HSR42/45)
786-27001-3.5	Smaller
786-27001-2.3	Pressure feed only

Rebuild Kit:

HSR42/45: **KHS-016**
HSR48: **KHS-031**